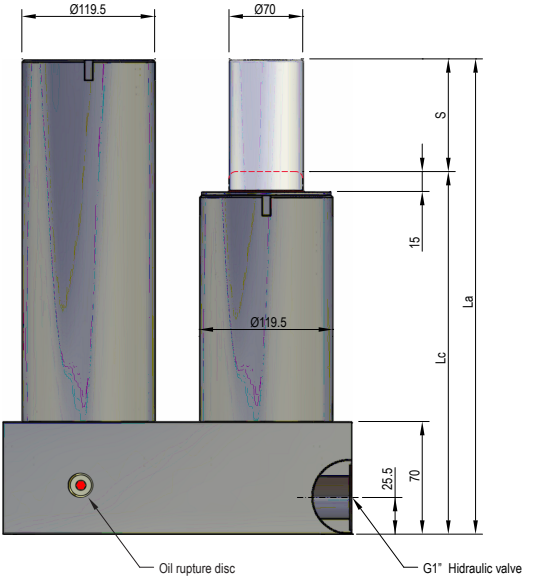

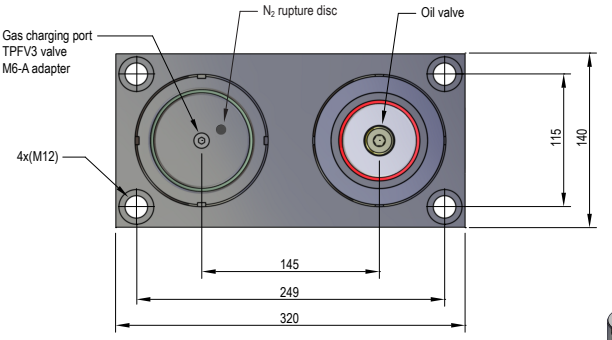

Code	Smax mm	La mm	Lc mm	Max. operation force	Charging N_2 pressure		Max. working specifications		Max. working temperature
					Min.	Max.	Velocity	Strokes / min	
TPCH 12000x25	25	216	191	12000 daN	50 Bar	150 Bar	20 m/min	40 spm	60 ºC
TPCH 12000x50	50	266	216					30 spm	
TPCH 12000x63	63	292	229					20 spm	